# Model ECLV30 - Vanguard Internal Halyard

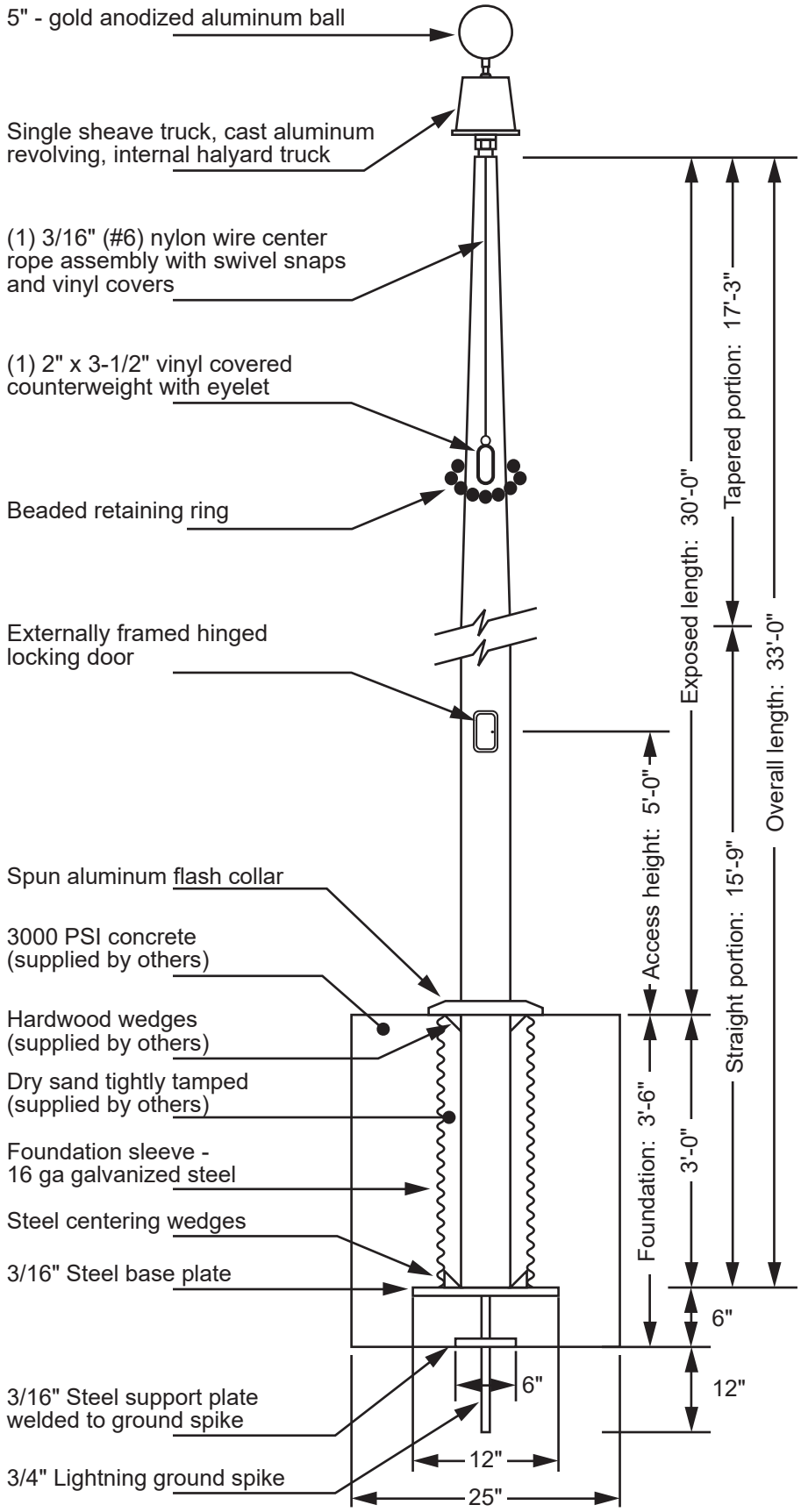


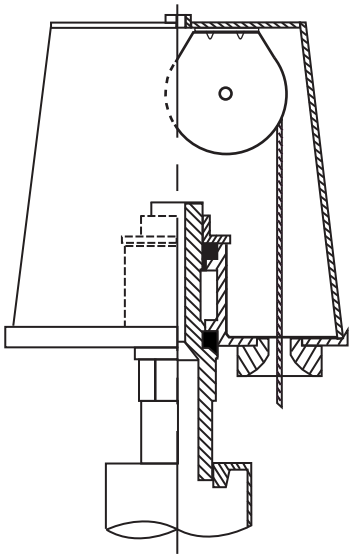

**Revolving Internal Halyard Truck**
Cast aluminum body
Enclosed stainless steel ball bearing and raceway
Plated steel sheave

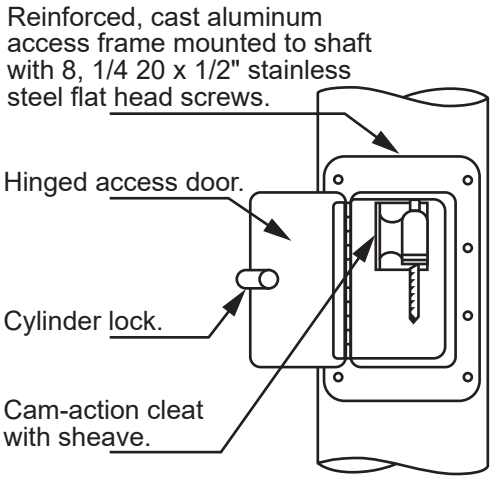


| | | | | |
|---|---|---|---|---|
| Project:<br>Location:<br>Contractor:<br>Customer: | Date:<br>Job:<br>Revision: | Exposed Height __ 30'-0"<br>Overall Height ___ 33'-0"<br>Butt Diameter____ 5"<br>Top Diameter ____ 3"<br>Wall Thickness___ .188"<br>Ships in 1 section | Ground Set Tapered Aluminum Flagpole<br>ALLOY 6063T6<br>80 grit polish<br>FINISH: | FLAGS.COM · FAMILY OWNED · AMERICAN MADE |