Aeolus Series
External Ground Set
20X - 40X

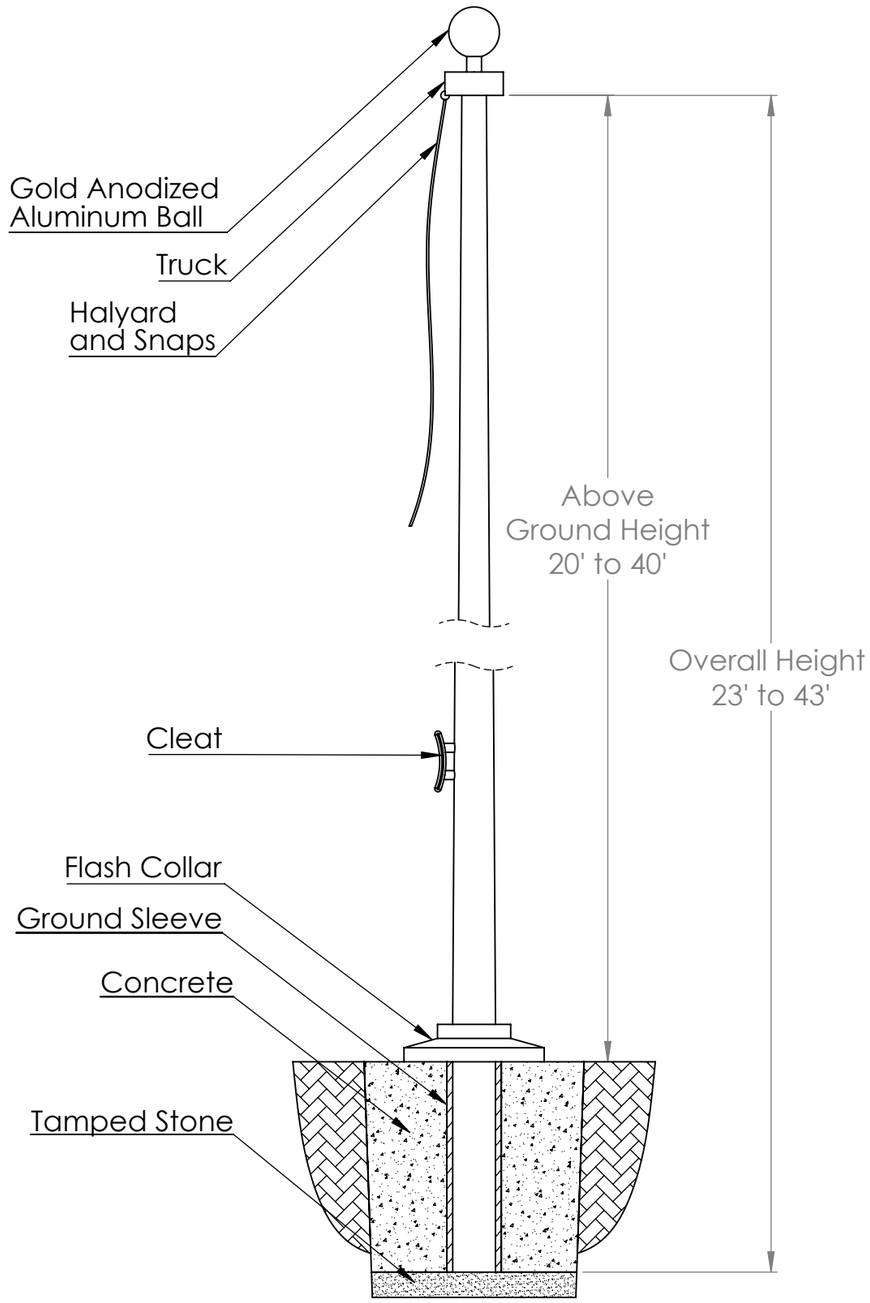

Fiberglass Stationary External Truck

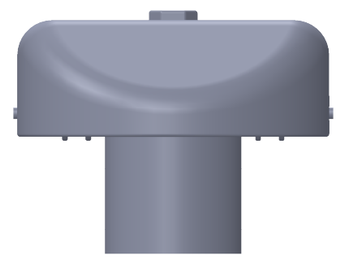

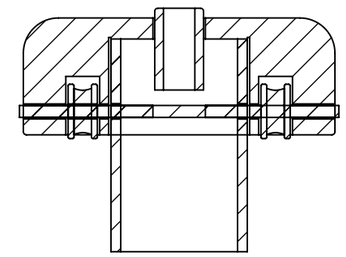

Specifications and Accessories

Model	20X	25X	30X	35X	40X
Above Ground Height	20'	25'	30'	35'	39'
Overall Height	23'	28'	33'	39'	43'
Butt Diameter	5.75"	6"	6.75"	7"	7"
Top Diameter	3"	3"	3"	3"	3"
Pole Weight (lbs)	36	59	77	115	143
Shipping Weight (lbs)	105	113	151	197	219
Ground Sleeve I.D.	8"	8"	8"	8"	8"
Ground Sleeve Length	3'	3'	3'	4'	4'
Cleat	8.5" NY	8.5" NY	8.5" NY	8.5" NY	8.5" NY
Ball Diameter	6"	6"	6"	8"	8"
Halyard	#10	#10	#10	#10	#10
Flash Collar	16"	16"	16"	16"	16"
Truck	F/G	F/G	F/G	F/G	F/G
Snaps	Brass	Brass	Brass	Brass	Brass
Standard Flag Size	4'X6'	4'X6'	5'X8'	5'X8'	6'X10'

Specifications

Provide a Fiberglass Reinforced Composite (FRC) Ground set flagpole Model # **20X** as manufactured by PLP Composites, Fitzwilliam, NH 03447.

The flagpole shall have a mounting height of 20' and 3' below grade for an overall length of 23'.

The butt diameter shall be 5.75" and the top diameter 3". The pole weight shall be approximately 36 lbs. and a total shipping weight of 105 lbs.

The flagpole shall be manufactured of fiberglass woven roving and polyester resin with 75% of the reinforcing fibers oriented in the axial plane for maximum stiffness and 25% in the radial plane for required hoop strength. Load calculations shall be based on AASHTO and NAAMM standards with the pole designed with a two to one (2:1) safety factor for 125 mph winds, unflagged, with a 1.3 gust factor.

The flagpole shall have an Entasis taper and shall be void of vertical mold seams.

The flagpole shall be sanded smooth and coated with a high gloss Aliphatic Polyurea coating system which provides extended UV protection and weatherability.

Standard colors include: White, Black, Bronze, Faux-Luminum, & Metallic Bronze

Aeolus Series - Model #20X	**Standard Fittings:**		**Project:**
20' Above Grade Height	6" Gold Anodized Ball	40' of #10 Polyester Halyard	
23' Overall Height	Cast FG Stationary Truck	16" Flash Collar	**Location:**
Top Diameter - 3"	1 pair of Brass Snaps	8.5" Nylon Cleat	
Butt Diameter - 5.75"	1 pair of vinyl covers	3'x8" Ground Sleeve	**Date:**

PLP Composites

57 Creamery Road - PO Box 429, Fitzwilliam, NH 03447 - Phone: 800-262-6075 - www.plpcomp.com or www.zeusflagpoles.com - info@plpcomp.com